4000R Outboard Pump (114RW-OBF)

4000 (90°) Outboard Pump Features:

- Small body right angle T&E cast housing with 4” inlet & outlet.
- Available with optional nitrided housing, Teflon seals.
- 4” Steel weld flanges.
- 7.5” helical cut, nitrided steel gears.
- Requires minimum 3” hose & fitting.

Part Number:

- 114RW-OBF 4” T&E 90° with outboard gear case assembly.

Horsepower Requirements:

- Hydraulic Motor 30-40hp.
  - 109 Series Recommended.
- Electric Motor 15-20 hp with 440 VFD.

Recommended Operating Procedures

- Maximum Temp: 212°F (regular seals).
- Maximum RPM: 750 RPM at the pump.
- Maximum Pressure: 125PSI.
  - *Note: Pump pressure is maximum safe operating pressure, not the maximum pressure the pump will produce.*
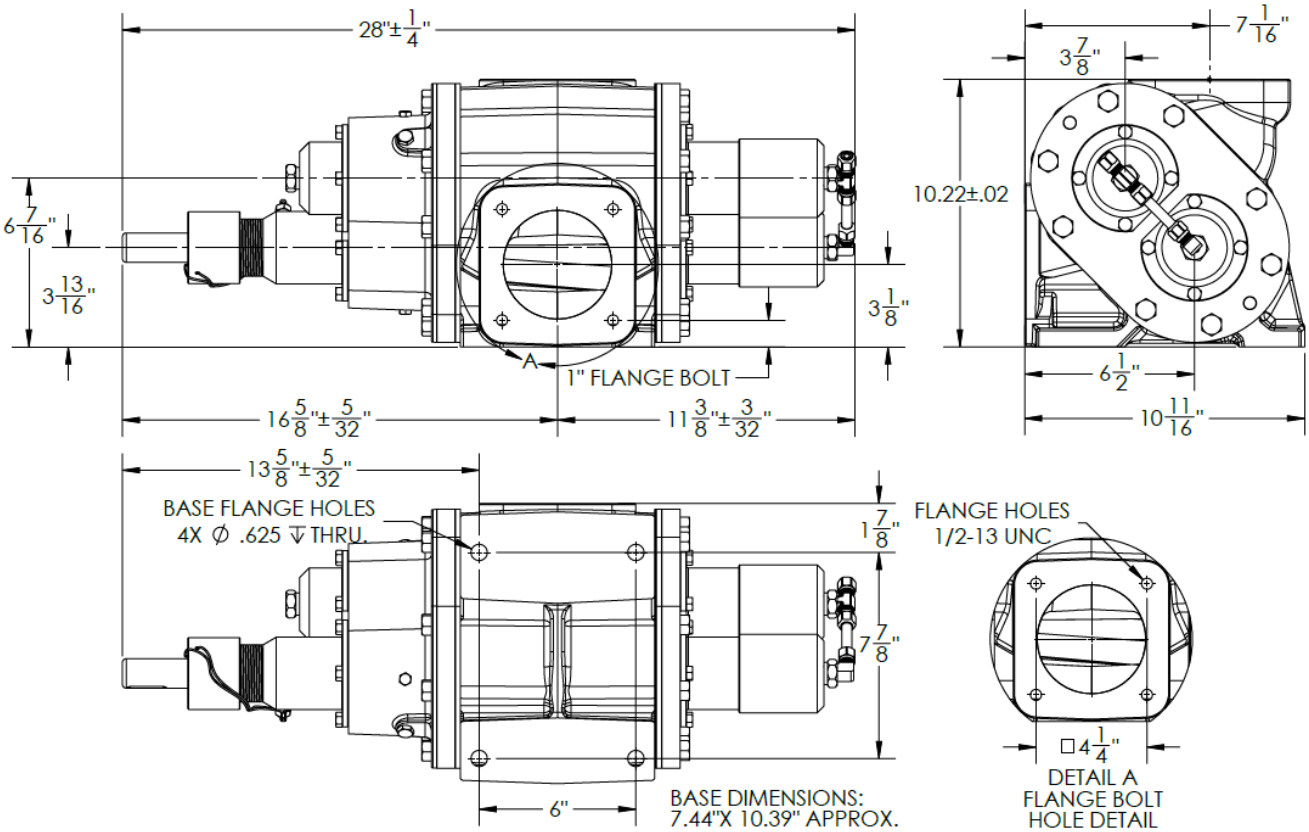
Installation Dimensions: